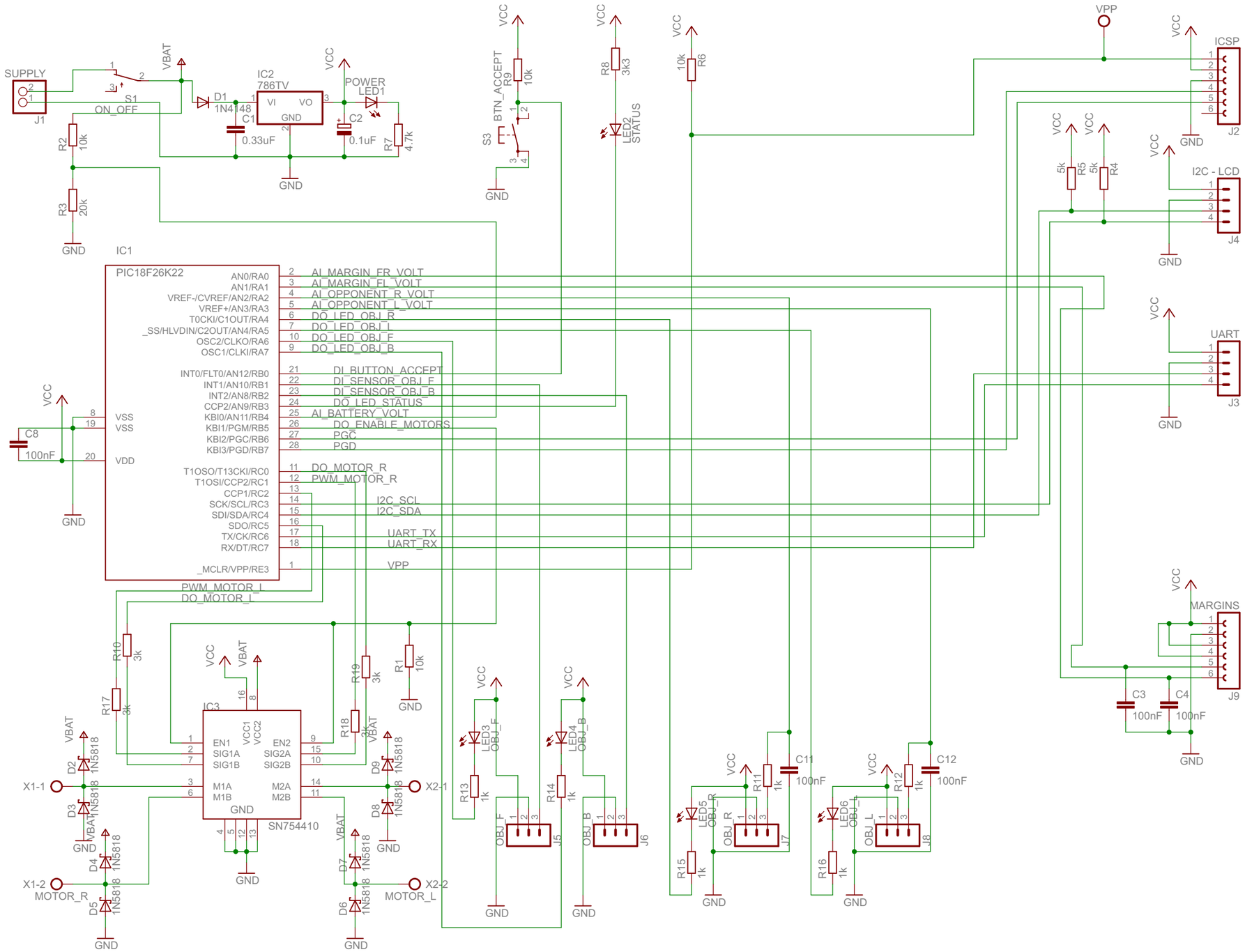
SUPPLY
J1
S1
ON_OFF
VBAT
D1
1N4148
IC2
786TV
VI
VO
GND
C1
0.33uF
C2
0.1uF
VCC
POWER
LED1
R7
4.7k
R2
10k
R3
20k
GND
IC1
PIC18F26K22
AN0/RA0
AN1/RA1
VREF-/CVREF/AN2/RA2
VREF+/AN3/RA3
T0CKI/C1OUT/RA4
_SS/HLVDIN/C2OUT/AN4/RA5
OSC2/CLKO/RA6
OSC1/CLKI/RA7
INT0/FLT0/AN12/RB0
INT1/AN10/RB1
INT2/AN8/RB2
CCP2/AN9/RB3
KBI0/AN11/RB4
KBI1/PGM/RB5
KBI2/PGC/RB6
KBI3/PGD/RB7
T1OSO/T13CKI/RC0
T1OSI/CCP2/RC1
CCP1/RC2
SCK/SCL/RC3
SDI/SDA/RC4
SDO/RC5
TX/CK/RC6
RX/DT/RC7
_MCLR/VPP/RE3
VSS
VDD
C8
100nF
AI_MARGIN_FR_VOLT
AI_MARGIN_FL_VOLT
AI_OPPONENT_R_VOLT
AI_OPPONENT_L_VOLT
DO_LED_OBJ_R
DO_LED_OBJ_L
DO_LED_OBJ_F
DO_LED_OBJ_B
DI_BUTTON_ACCEPT
DI_SENSOR_OBJ_F
DI_SENSOR_OBJ_B
DO_LED_STATUS
AI_BATTERY_VOLT
DO_ENABLE_MOTORS
PGC
PGD
DO_MOTOR_R
PWM_MOTOR_R
I2C_SCL
I2C_SDA
UART_TX
UART_RX
VPP
PWM_MOTOR_L
DO_MOTOR_L
BTN_ACCEPT
R9
10k
S3
R8
3k3
LED2
STATUS
R6
10k
ICSP
J2
I2C - LCD
J4
R5
5k
R4
5k
UART
J3
MARGINS
J9
C3
100nF
C4
100nF
R10
3k
R17
3k
R19
3k
R18
3k
R1
10k
IC3
EN1
SIG1A
SIG1B
M1A
M1B
VCC1
VCC2
EN2
SIG2A
SIG2B
M2A
M2B
SN754410
D2
1N5818
D3
1N5818
D4
1N5818
D5
1N5818
D6
1N5818
D7
1N5818
D8
1N5818
D9
1N5818
X1-1
X1-2
MOTOR_R
X2-1
X2-2
MOTOR_L
R13
1k
LED3
OBJ_F
J5
R14
1k
LED4
OBJ_B
J6
R11
1k
C11
100nF
LED5
OBJ_R
J7
R15
1k
R12
1k
C12
100nF
LED6
OBJ_L
J8
R16
1k